ZONE	REV	REVISIONS DESCRIPTION	DATE	APVD
5F 2E 2F	A	ADDED PIC OF CONN MOUNTS ADDED 4171595 ZONE INFO CLARIFIED INSERT CALLOUT	5-12-83	McCCORD FORD NORB P.
	B	ADDED ITEM 22, 62 PL. REVISED PICTURE.	84-06-16	CORCORAN M FORD
4F,5F 4C,5C	C	REVISED PICTURE 4 PLS		

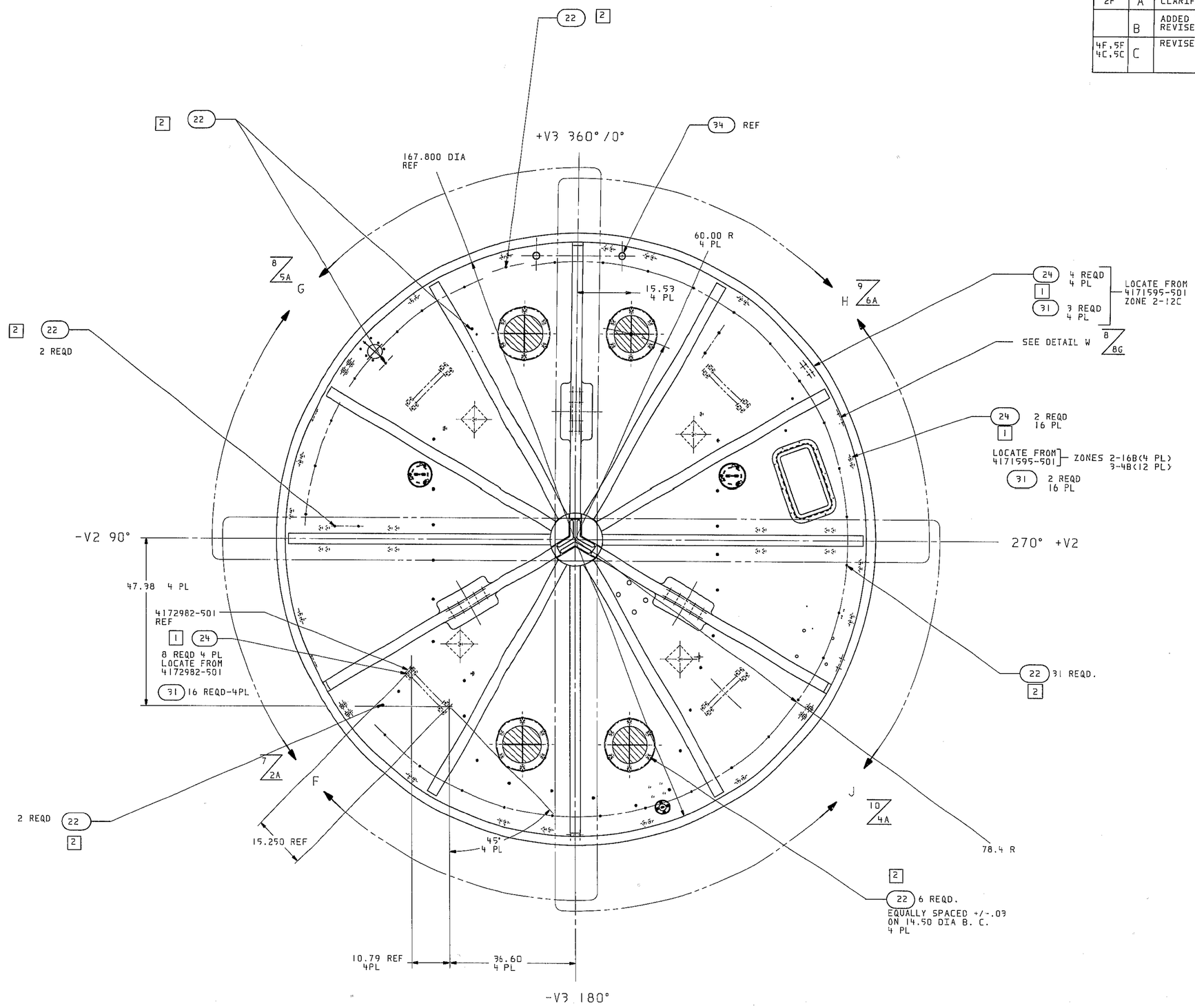

VIEW E-E 1 2B
LOOKING AFT

SIZE	FSCM NO.	DRAWING NO.	REV
E	06887	4174146	C
SCALE 1/10		SHEET 2	

64-30