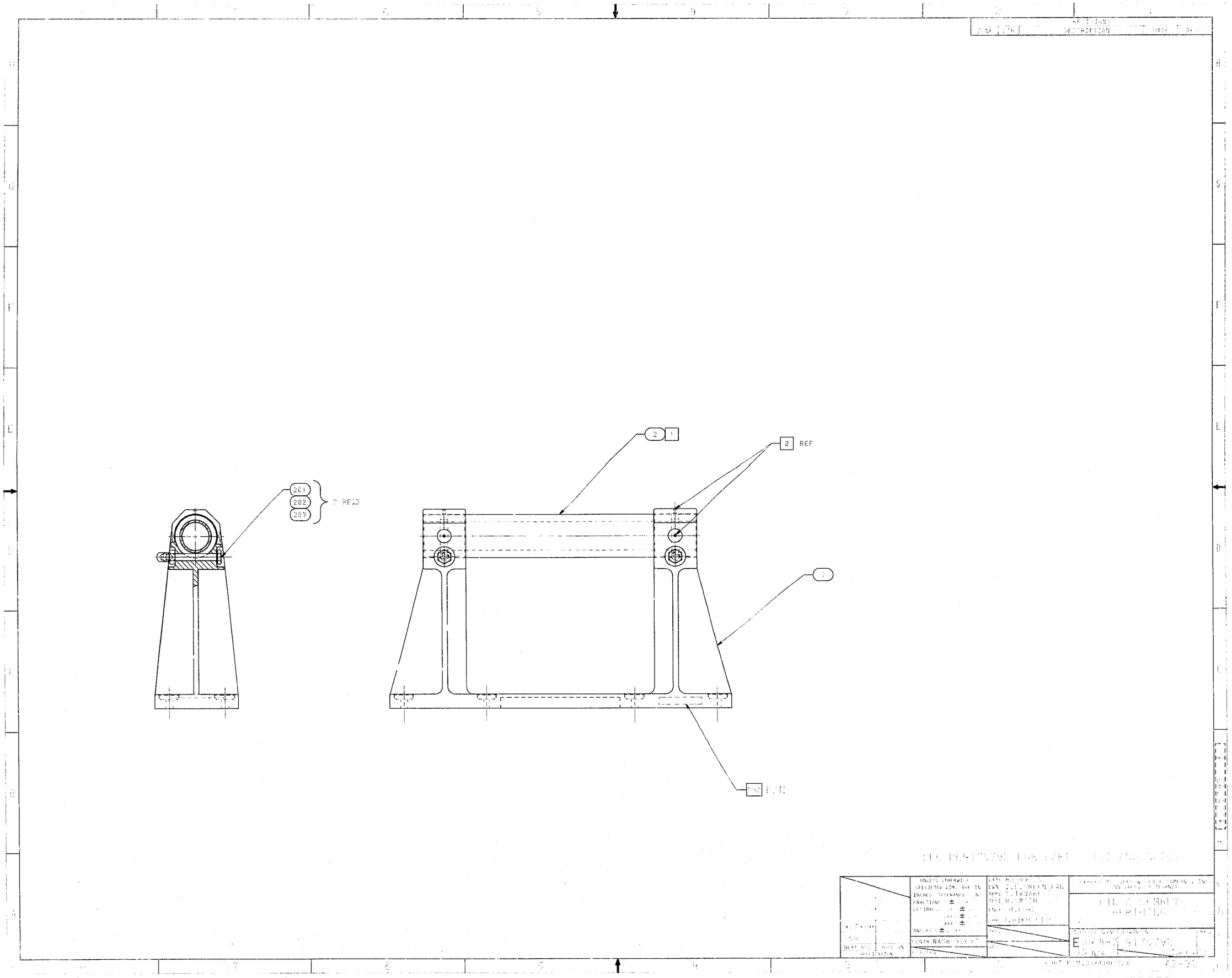

GREENSPANSBERTHING PIN ASSY- AFT BULKHEAD (FSS)

SSN1,STRCT3
10-21-82